GX 40 E

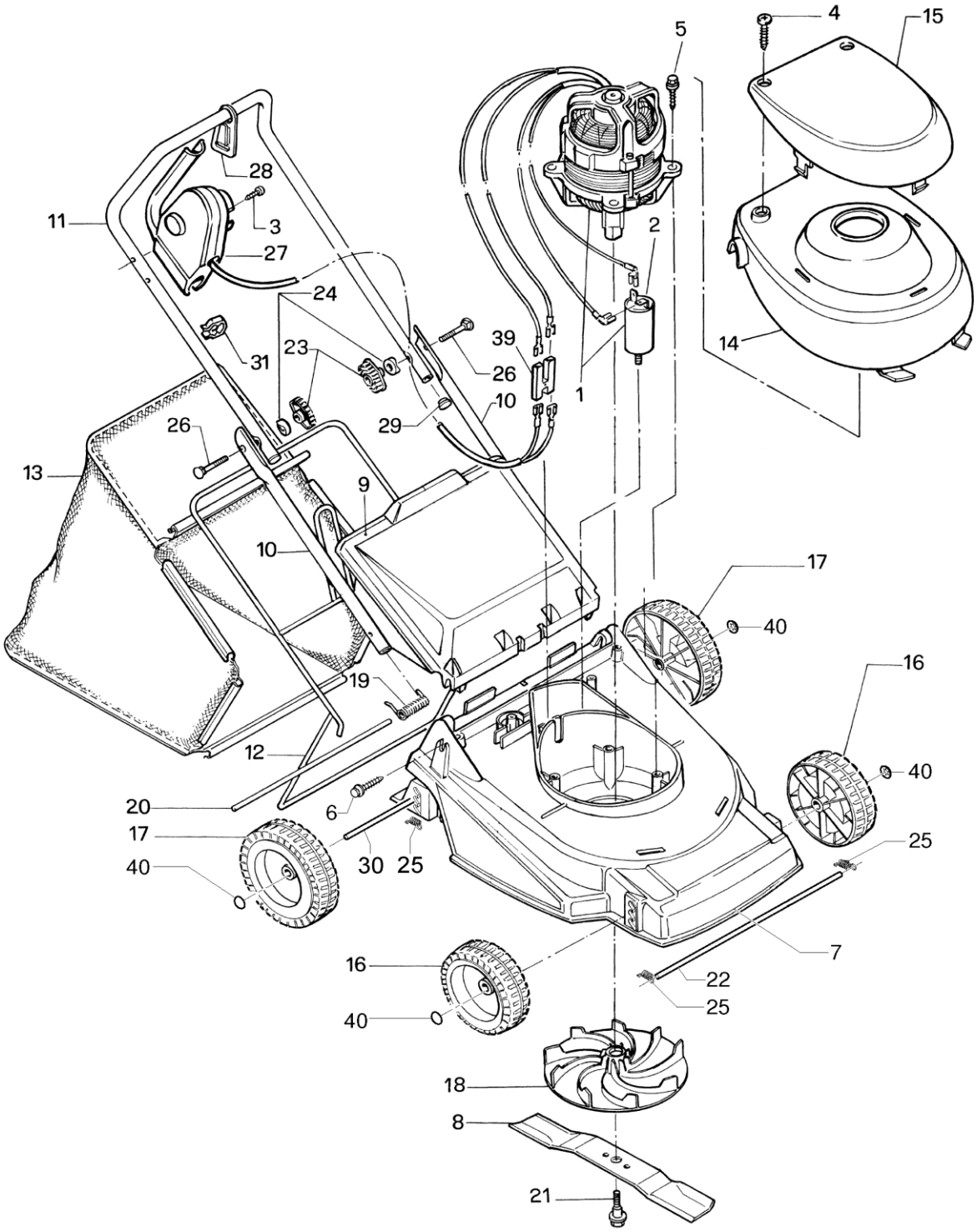
4
15
5
28
11
3
27
2
24
39
14
31
23
26
1
10
29
26
13
9
10
17
40
16
19
12
40
20
6
17
30
25
25
40
7
16
22
25
40
18
8
21

IMI JARDIN

GX 40 E

POS.	CODICE	I	F	D	GB	E	Q.TY
1	CP017100F	Motore El. 1100 W	Moteur	Motor	Engine	Motor	1
2	CP019814	Condensatore 14 M	Condensateur	Kondensator	Condenser	Condensador	1
3	CP023925	Vite Autof.	Vis	Schraube	Screw	Tornillo	2
4	CP025025	Vite Autof.	Vis	Schraube	Screw	Tornillo	2
5	CP026030	Vite Autof.	Vis	Schraube	Screw	Tornillo	4
6	CP026338	Vite Autof.	Vis	Schraube	Screw	Tornillo	2
7	CP040002.02	Chassis Rosso N.T	Carter	Gehäuse	Deck	Chasis Ral 3000	1
8	CP040010	Lama	Lame	Messer	Blade	Cuchilla	1
9	CP047018	Parasassi	Deflecteur	Deflektor	Rear Door	Deflectór	1
10	CP032033	Manico Inf.	Guidon	Stiel	Handle	Manillar	2
11	CP032038	Manico Sup.	Guidon	Stiel	Handle	Manillar	1
12	CP040078	Telaio Cesto	Attelage	Grasfangrahmen	Frame	Armazon Saco	1
13	CP040083.05	Tela Cesto Nera	Sac Ramasseur	Grasfangsack	Grass Bag	Saco Tela	1
14	CP032102	Cupolina Inf. Bianc	Calotte	Verkleidung	Cover	Carcasa	1
15	CP032103.02	Cupolina Sup. Ros	Calotte	Verkleidung	Cover	Carcasa Ral 3000	1
16	CP033109	Ruota 150 Foro 7	Roue	Rad	Wheel	Rueda	2
17	CP040108	Ruota 170 Foro 7	Roue	Rad	Wheel	Rueda	2
18	CP032158	Ventola	Ventilateur	Laufrad	Fan	Ventilador	1
19	CP047193	Molla Parasassi	Ressort	Feder	Spring	Muelle	1
20	CP040203	Astina	Axe Pivot	Stange	Hinge Pin	Eje Deflectór	1
21	CP032209	Vite Lama	Vis	Schraube	Screw	Tornillo	1
22	CP040204	Asse Per Ruote An	Axe Roue	Radstift	Pin	Eje Rueda	1
23	CP032228	Pomolo Manico	Écrou	Griff	Knob Handle	Pomo Manillar	2
24	CP032230	Rondella	Rondelle	Scheibe	Washer	Arandela	2
25	CP033192	Molla Per Ruote 40	Ressort	Feder	Spring	Muelle	4
26	CP040640	Vite Ttqst	Vis	Schraube	Screw	Tornillo	2
27	CP042185	Interruttore D-I-A-B	Interrupteur	Schalter D-I-F-A-B-	Switch	Interruptor	1
28	CP042218	Supporto Cavo	Porte Cable	Kabelhalter	Cable Support	Fijador Cable	1
29	CP045718	Tappo	Couvercle	Kappe	Cap	Tapa	2
30	CP040205	Asse Per Ruote Po	Axe Roue	Radstift	Pin	Eje Rueda	1
31	CP050222	Fermacavo	Attache Cable	Kabelbeschwerer	Clip	Fijador Cable	1
39	CP019910	Morsetto	Attache Cable	Kabelbeschwerer	Clip	Fijador Cable	1
40	CP046617	Cappellotto Sferico	Clip	Rückhalt	Retainer	Anillo Clip	4